SLIM UNDERBAR SINK

UNDERBAR - SINKS

MATERIALS

- 18 Gauge 304 Stainless Steel; Fabricated
- Stainless Steel Apron on Front and Sides
- Stainless Steel Legs and Cross-Bracing
- Plastic Adjustable Bullet Feet

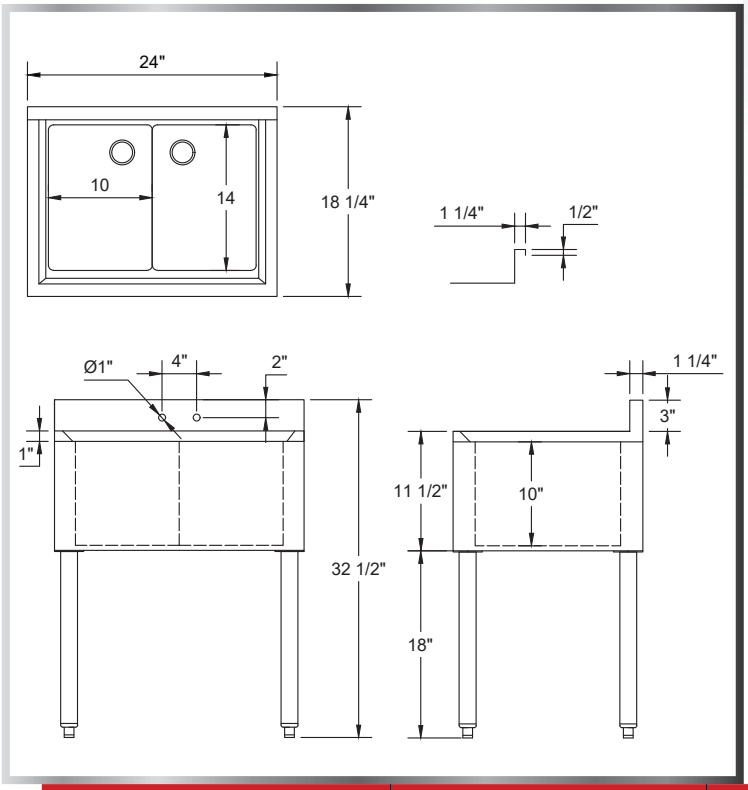

FEATURES

- 4" On-Center Wall-Mounted Faucet Holes
- 10" Deep Sink Bowls
- Includes Drain Baskets and Removable Overflow Stand Pipes
- Marine Edges

Include a New 4" OC Faucet With Your Order! (See Page 87)

Side Splashes for Underbar Sinks Now Available! (See Page 85)

MODEL NUMBER	BOWL SIZE L X W X H	LENGTH	WIDTH	NUMBER OF BOWLS
UW-2-101410-24	10" x 14" x 10"	24"	18-¼"	2
UW-3-101410-36	10" x 14" x 10"	36"	18-¼"	3
UW-4-101410-48	10" x 14" x 10"	48"	18-¼"	4

(609) 642 - 8389 | SALES@NBREQUIPMENT.COM | WWW.NBREQUIPMENT.COM
NBR EQUIPMENT, 10 ABEEL ROAD, CRANBURY, NJ 08512